GALAXY EC

High efficiency air cooled chillers

- **Adaptable to every use**
- **Wide range of accessories**
- **R410a multiscroll unit**
- **Acoustically isolated**
- **Attention to the sizing and selection of the components**

The Galaxy EC units have been designed according to Erp Directive 2009/125/CE and meet the related seasonal efficiency levels requested by the rule. The compactness and the presence of a wide range of equipments and accessories, allow the use of the Galaxy units in any plant environment. Thanks to the construction solutions adopted, installation and maintenance activities are particularly facilitated allowing saving time and money to the installation personnel.

In this regards, great attention has been payed on the components design. A multistep capacity control (from 2 to 6 according to the models) allows the part load performance increasing. High efficiency air cooled water chillers.

All standard models have the compressors assembled into a soundproofed compartment separated from the fan section. All units, included all the different versions Std / LN / SLN / FC can be equipped with a several accessories which allow the adaptability to various needs of plant character.

The units are mounted on selfsupporting frame galvanised steel made complete with removable panelling, entirely painted with stove-dried polyester powder colour RAL 9018.
Hermetic Scroll COMPRESSOR of a leading brand particularly suitable for applications in air-conditioning able to ensure high efficiency and, at the same time, limited levels of noise and vibrations.

The ventilation section composed of EC fan / electronic motors with high-efficiency permanent magnets brushless motors.

The electric panel fully wired inside a sealed, steel box, made in compliance with the strictest European legislation. The controls are made by a microprocessor unit in combination with the safety devices fitted on the unit or externally connected.

Accessories

1 pump	Refrigerants gauges	Condensers fully Electrofin® painted
1 HP pump	Top remote control	Coils with fins in copper
2 pumps	Antifreeze evaporator heater + pipes	Power factor regulator kit (cos φ 0,95)
2 HP pumps	Antifreeze evaporator heater + buffer tank	Electrical panel ventilation / Heating kit
1 pump + buffer tank in series	Compressor crankcase heater	Electronic thermostatic expansion valve
1 HP pump + buffer tank in series	Compressor magnetothermal protection	El. Exp. Valve backup battery
2 pumps + buffer tank in series	Anti-vibration mount feet	Liquid receiver
2 HP pumps + buffer tank in series	Condensing coils protection grids	Liquid line solenoid valve
Partial heat recovery (desuperheater)	Compressors soft starter	Interface module RS485 Modbus (INCLUDED)
Total heat recovery	Coils with prevarnished fins	EC Fans (INCLUDED)

Galaxy EC STD Technical Data

GALAXY EC STD				082A	102A	122A	152A	123A	133A	153A	134A	154A	126A
COOLING	A35 / W7	Cooling capacity	kW	39,52	49,72	58,55	75,93	85,22	93,63	112,33	125,93	151,52	173,54
		Total power input (1)	kW	14,78	18,47	22,29	28,25	33,26	35,3	41,58	47,04	56,77	66,47
		EER (EN 14511-2013)		2,63	2,65	2,59	2,66	2,54	2,62	2,67	2,64	2,63	2,58
	A35 / W18	Cooling capacity	kW	54,21	68,62	79,82	103,33	116,57	128,8	151,28	174,21	202,99	236,14
		Total power input (1)	kW	15,9	19,84	24,38	30,84	36,17	39,13	45,98	52,01	63,13	72,88
		EER (EN 14511-2013)		3,32	3,36	3,19	3,28	3,17	3,23	3,23	3,27	3,13	3,15
SEER				3,83	3,85	3,86	3,9	4,13	4,35	4,43	4,02	4,64	4,53
η				150	151	151	153	162	171	174	158	183	178
Max current			A	34,8	39,4	47,6	63,4	72,9	81,6	92,1	106,8	123,8	142,8
Current at start			A	113,4	131,7	142,6	173,7	167,2	190,6	202,4	215,9	233,6	236
Scroll Compressors			n°	2	2	2	2	3	3	3	4	4	6
Refrigerant Circuits			n°	1	1	1	1	1	1	1	2	2	2
Capacity steps			n°	2	2	2	2	3	3	3	4	4	6
Supply voltage			V/Ph/Hz	400/3/50									
Sound power Lw (2)			dB(A)	78,4	78,4	78,4	82	80,7	80,7	83,2	81,4	84,6	83,2
Sound pressure Lp (2)			dB(A)	46,6	46,6	46,6	50,1	48,8	48,8	51,3	49,5	52,6	51,1
USER PLANT HEAT EXCHANGER													
Type of fluid				Clean water									
Brazed plate exchanger			n°	1	1	1	1	1	1	1	1	1	1
Water flow (A35/W7)			l/s	1,89	2,38	2,8	3,63	4,07	4,47	5,37	6,02	7,24	8,29
Pressure drops (A35/W7)			kPa	26,97	34,01	33,48	26,18	19,79	23,89	24,21	34,93	43,7	45,05
FAN SECTION													
Fans			n°	1	1	1	2	2	2	2	2	3	3
Air flow			m^3/s	6,50	6,38	6,38	13,01	13,01	13,01	12,77	12,54	19,15	18,63
Rotation speed			min^{-1}	932	932	932	932	932	932	932	932	932	932
Unit power input			kW	1,27	1,31	1,31	1,29	1,27	1,27	1,31	1,34	1,31	1,36
Unit current input			A	2,16	2,23	2,23	2,18	2,16	2,16	2,23	2,28	2,23	2,31
SIZES AND WEIGHT													
Length			mm	1955	1955	1955	3005	3005	3005	3005	3005	4255	4255
Width			mm	1123	1123	1123	1123	1123	1123	1123	1123	1123	1123
Height			mm	1954	1954	1954	1954	1954	1954	1954	1954	1954	1954
Weight			Kg	528	553	559	701	778	780	832	941	1065	1270

A35/W7 Temperatura aria est.: 35 °C - Temp. fluido impianto (acqua): 12/7 °C
A35/W18 Temperatura aria est.: 35 °C - Temp. fluido impianto (acqua): 23/18 °C
(1) Potenza el. assorbita totale esclusa pompa lato impianto
(2) Potenza sonora in accordo alla normativa ISO3744. Livello medio di pressione sonora a 10 m in campo libero con unità posizionata su superficie riflettente.

Galaxy EC SLN Technical Data

GALAXY EC SLN				082A	102A	122A	152A	123A	133A	153A	134A	154A	126A
COOLING	A35 / W7	Cooling capacity	kW	38,84	47,91	59,18	73,36	85,30	93,55	109,14	126,49	146,55	160,30
		Total power input (1)	kW	14,71	18,05	21,70	28,02	31,79	34,71	41,29	46,03	56,70	67,14
		EER (EN 14511-2013)		2,60	2,61	2,68	2,59	2,66	2,67	2,62	2,71	2,55	2,36
	A35 / W18	Cooling capacity	kW	52,96	65,68	82,14	99,27	117,46	106,97	146,96	176,34	198,77	218,19
		Total power input (1)	kW	15,98	19,58	23,25	30,87	34,51	36,01	45,78	50,54	62,49	73,70
		EER (EN 14511-2013)		3,23	3,26	3,43	3,15	3,34	2,93	3,16	3,40	3,10	2,90
SEER				3,85	3,84	3,88	3,87	4,24	4,34	4,34	4,42	4,31	4,15
η				151	151	152	152	167	171	171	174	169	163
Max current			A	34,0	38,6	48,5	61,8	71,3	80,0	90,5	106,9	121,4	140,4
Current at start			A	112,6	130,9	143,5	172,1	165,6	189,0	200,8	216,0	231,2	233,6
Scroll Compressors			n°	2	2	2	2	3	3	3	4	4	6
Refrigerant Circuits			n°	1	1	1	1	1	1	1	2	2	2
Capacity steps			n°	2	2	2	2	3	3	3	4	4	6
Supply voltage			V/Ph/Hz	400/3/50									
Sound power Lw (2)			dB(A)	74,1	74,1	75,9	78,1	76,5	76,5	79,2	78,1	80,6	78,8
Sound pressure Lp (2)			dB(A)	42,3	42,3	44,0	46,2	44,6	44,6	47,3	46,0	48,6	46,8
USER PLANT HEAT EXCHANGER													
Type of fluid				Clean water									
Brazed plate exchanger			n°	1	1	1	1	1	1	1	1	1	1
Water flow (A35/W7)			l/s	1,86	2,29	2,83	3,50	4,08	4,47	5,21	6,04	7,00	7,66
Pressure drops (A35/W7)			kPa	26,05	31,58	34,21	24,43	19,83	23,85	22,85	35,24	40,88	38,44
FAN SECTION													
Fans			n°	1	1	2	2	2	2	2	3	3	3
Air flow			m^3/s	5,52	5,39	11,04	11,04	10,78	10,78	10,54	15,62	15,13	15,13
Rotation speed			min^{-1}	812	812	812	812	812	812	812	812	812	812
Unit power input			kW	0,78	0,79	0,78	0,78	0,79	0,79	0,8	0,81	0,82	0,82
Unit current input			A	1,33	1,34	1,33	1,33	1,34	1,34	1,36	1,38	1,39	1,39
SIZES AND WEIGHT													
Length			mm	1955	1955	3005	3005	3005	3005	3005	4255	4255	4255
Width			mm	1123	1123	1123	1123	1123	1123	1123	1123	1123	1123
Height			mm	1954	1954	1954	1954	1954	1954	1954	1954	1954	1954
Weight			Kg	543	568	687	717	793	795	848	1066	1085	1269

A35/W7 Temperatura aria est.: 35 °C - Temp. fluido impianto (acqua): 12/7 °C
A35/W18 Temperatura aria est.: 35 °C - Temp. fluido impianto (acqua): 23/18 °C
(1) Potenza el. assorbita totale esclusa pompa lato impianto
(2) Potenza sonora in accordo alla normativa ISO3744. Livello medio di pressione sonora a 10 m in campo libero con unità posizionata su superficie riflettente.

Hydronic kit main technical data

Galaxy EC STD/ SLN unit		082A	102A	122A	152A	123A	133A	153A	134A	154A	126A
HYDRONIC KIT (OPTIONAL)											
Storage water vessel	l	150	150	150	300	300	300	300	300	300	300
Expansion vessel	l	6	6	6	10	10	10	10	10	18	18
Max. water pressure	kPa	6,00	6,00	6,00	6,00	6,00	6,00	6,00	6,00	6,00	6,00
Nitrogen precharge pressure	kPa	150,0	150,0	150,0	150,0	150,0	150,0	150,0	150,0	150,0	150,0
VERSIONS: 1 pump std											
Pump n°	n°	1	1	1	1	1	1	1	1	1	1
Available external pressure	kPa	131	116	107	111	111	99	78	94	71	75
Power input (each)	kW	1,1	1,1	1,1	1,5	1,5	1,5	1,5	2,0	2,0	2,5
Current input (each)	A	2,2	2,2	2,2	2,7	2,7	2,7	2,7	3,7	3,7	5,0
Empty weight	Kg	49	49	49	66	66	66	70	70	82	82
VERSIONS: 1 pump HP											
Pump n°	n°	1	1	1	1	1	1	1	1	1	1
Available external pressure	kPa	162	148	141	149	150	139	160	188	165	133
power input (each)	kW	1,40	1,40	1,40	2,00	2,00	2,00	2,50	3,30	3,30	3,30
Current input (each)	A	2,7	2,7	2,7	3,7	3,7	3,7	5,0	6,0	6,0	6,0
Empty weight	Kg	52	52	52	70	70	70	75	75	87	87
VERSIONS: 2 pumps std											
Pump n°	n°	2	2	2	2	2	2	2	2	2	2
Available external pressure	kPa	131	116	107	111	111	99	78	94	71	75
power input (each)	kW	1,1	1,1	1,1	1,5	1,5	1,5	1,5	2,0	2,0	2,5
Current input (each)	A	2,2	2,2	2,2	2,7	2,7	2,7	2,7	3,7	3,7	5,0
Empty weight	Kg	77	77	77	100	100	100	108	108	120	120
VERSIONS: 2 pumps HP											
Pump n°	n°	2	2	2	2	2	2	2	2	2	2
Available external pressure	kPa	162	148	141	149	150	139	160	188	165	133
power input (each)	kW	1,4	1,4	1,4	2,0	2,0	2,0	2,5	3,3	3,3	3,3
Current input (each)	A	2,7	2,7	2,7	3,7	3,7	3,7	5,0	6,0	6,0	6,0
Empty weight	Kg	83	83	83	108	108	108	118	118	130	130
VERSIONS: 1 pump std + buffer tank											
Pump n°	n°	1	1	1	1	1	1	1	1	1	1
Available external pressure	kPa	131	116	107	111	111	99	78	94	71	75
power input (each)	kW	1,1	1,1	1,1	1,5	1,5	1,5	1,5	2,0	2,0	2,5
Current input (each)	A	2,2	2,2	2,2	2,7	2,7	2,7	2,7	3,7	3,7	5,0
Empty weight	Kg	85	85	85	116	116	116	120	120	131	131

Hydronic kit main technical data

Galaxy EC STD/ SLN unit		082A	102A	122A	152A	123A	133A	153A	134A	154A	126A
VERSIONS: 1 pump HP + buffer tank											
Pump n°	n°	1	1	1	1	1	1	1	1	1	1
Available external pressure	kPa	162	148	141	149	150	139	160	188	165	133
power input (each)	kW	1,4	1,4	1,4	2,0	2,0	2,0	2,5	3,3	3,3	3,3
Current input (each)	A	2,7	2,7	2,7	3,7	3,7	3,7	5,0	6,0	6,0	6,0
Empty weight	Kg	88	88	88	120	120	120	125	125	137	137
VERSIONS: 2 pump std + buffer tank											
Pump n°	n°	2	2	2	2	2	2	2	2	2	2
Available external pressure	kPa	131	116	107	111	111	99	78	94	71	75
power input (each)	kW	1,1	1,1	1,1	1,5	1,5	1,5	1,5	2,0	2,0	2,5
Current input (each)	A	2,2	2,2	2,2	2,7	2,7	2,7	2,7	3,7	3,7	5,0
Empty weight	Kg	104	104	104	141	141	141	148	148	160	160
VERSIONS: 2 pumps HP + buffer tank											
Pump n°	n°	2	2	2	2	2	2	2	2	2	2
Available external pressure	kPa	162	148	141	149	150	139	160	188	165	133
power input (each)	kW	1,4	1,4	1,4	2,0	2,0	2,0	2,5	3,3	3,3	3,3
Current input (each)	A	2,7	2,7	2,7	3,7	3,7	3,7	5,0	6,0	6,0	6,0
Empty weight	Kg	110	110	110	150	150	150	160	160	172	172

Galaxy EC STD/ SLN sizes and operating spaces

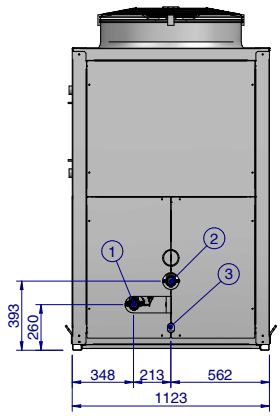

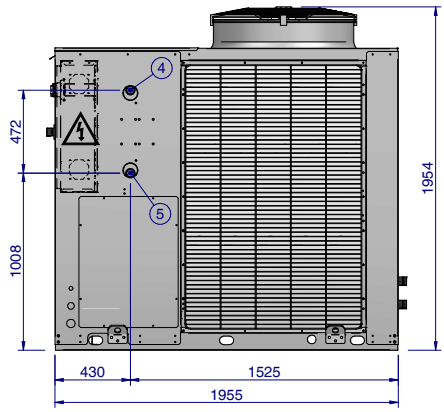

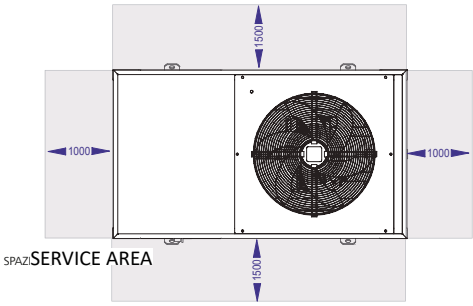

	GALAXY EC			1	2	3	4 (HRP)	5 (HRP)	4 (HRT)	5 (HRT)
Model	STD	SLN		Victaulic joint with welding connection						
082	X	X		1”-1/2	1”-1/2	1/2”	1”-1/2	1”-1/2	1”-1/2	1”-1/2
102	X	X		1”-1/2	1”-1/2	1/2”	1”-1/2	1”-1/2	1”-1/2	1”-1/2
122	X			1”-1/2	1”-1/2	1/2”	1”-1/2	1”-1/2	1”-1/2	1”-1/2

1 User side - Medium inlet connection
2 User side - Medium outlet connection
3 User side - Vessel drain connection
4 (HRP) Partial heat recovery - Medium outlet connection
5 (HRP) Partial heat recovery - Medium inlet connection
4 (HRP) Total heat recovery - Medium outlet connection
5 (HRP) Total heat recovery - Medium inlet connection

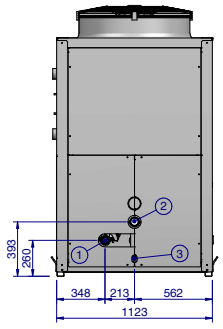

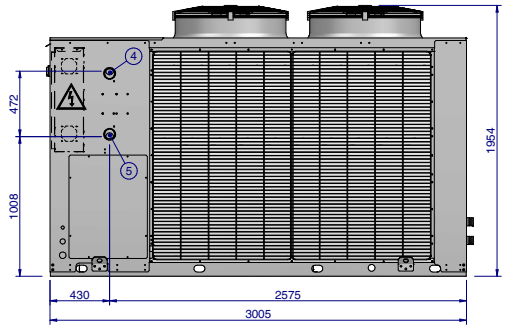

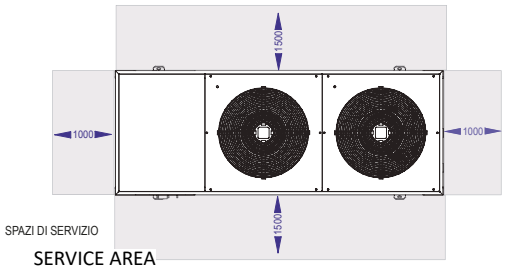

	GALAXY EC			1	2	3	4 (HRP)	5 (HRP)	4 (HRT)	5 (HRT)
Model	STD	SLN		Victaulic joint with welding connection						
102				2”	2”	1/2”	N.A.	N.A.	N.A.	N.A.
122		X		2”	2”	1/2”	1”-1/2	1”-1/2	2”	2”
152	X	X		2”	2”	1/2”	1”-1/2	1”-1/2	2”	2”
123	X	X		2”	2”	1/2”	1”-1/2	1”-1/2	2”	2”
133	X	X		2”	2”	1/2”	1”-1/2	1”-1/2	2”	2”
153	X	X		2”	2”	1/2”	1”-1/2	1”-1/2	2”	2”
134	X			2”-1/2	2”-1/2	1/2”	1”-1/2	1”-1/2	2”	2”

1 User side - Medium inlet connection
2 User side - Medium outlet connection
3 User side - Vessel drain connection
4 (HRP) Partial heat recovery - Medium outlet connection
5 (HRP) Partial heat recovery - Medium inlet connection
4 (HRP) Total heat recovery - Medium outlet connection
5 (HRP) Total heat recovery - Medium inlet connection
N.A. Not available

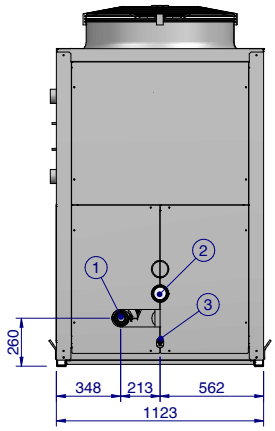

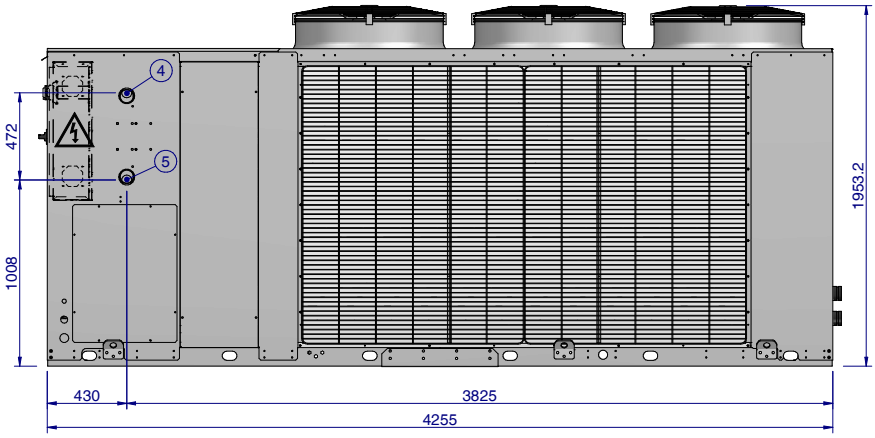

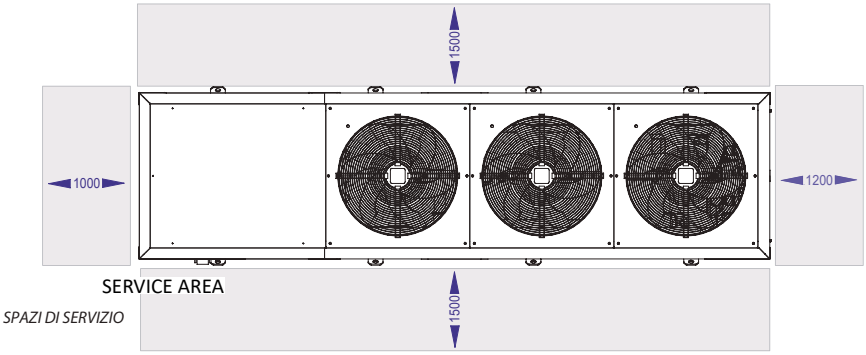

	GALAXY EC			1	2	3	4 (HRP)	5 (HRP)	4 (HRT)	5 (HRT)
Model	STD	SLN		Victaulic joint with welding connection						
153				2”-1/2	2”-1/2	1/2”	N.A.	N.A.	N.A.	N.A.
134		X		2”-1/2	2”-1/2	1/2”	2”-1/2	2”-1/2	2”-1/2	2”-1/2
154	X	X		2”-1/2	2”-1/2	1/2”	2”-1/2	2”-1/2	2”-1/2	2”-1/2
126	X	X		2”-1/2	2”-1/2	1/2”	2”-1/2	2”-1/2	2”-1/2	2”-1/2

1 User side - Medium inlet connection
2 User side - Medium outlet connection
3 User side - Vessel drain connection
4 (HRP) Partial heat recovery - Medium outlet connection

5 (HRP) Partial heat recovery - Medium inlet connection
4 (HRP)Total heat recovery - Medium outlet connection
5 (HRP) Total heat recovery _ Medium inlet connection
N.A. Not available